Hard Drive Power Connector

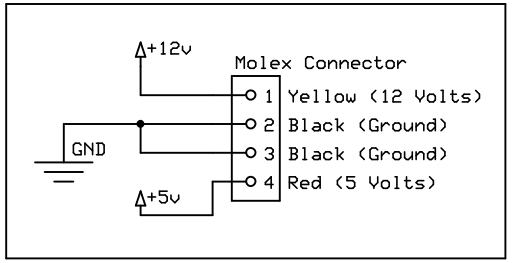

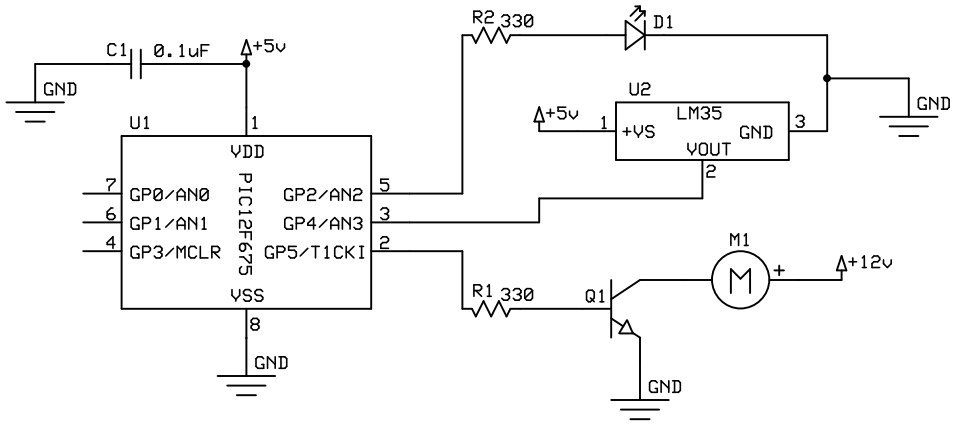

Notes:

The Temperature sensor U2 needs to be located next to the item being monitored.
As the temperature increases the motor duty cycle will increase.

D1 and R2 are optional components, they only need to be installed for a visual indication of the current duty cycle.

Q1 is a 2N4401 NPN transistor.
Resistors are all 1/4 Watt
D1 is a blue LED

Alan's Electronic Projects		
PWM Fan Controller		
Alan Parekh	Rev 1 3/15/2010	Page 1 of 1